type series booklet
8645.1/1-10

SISTO®-LC

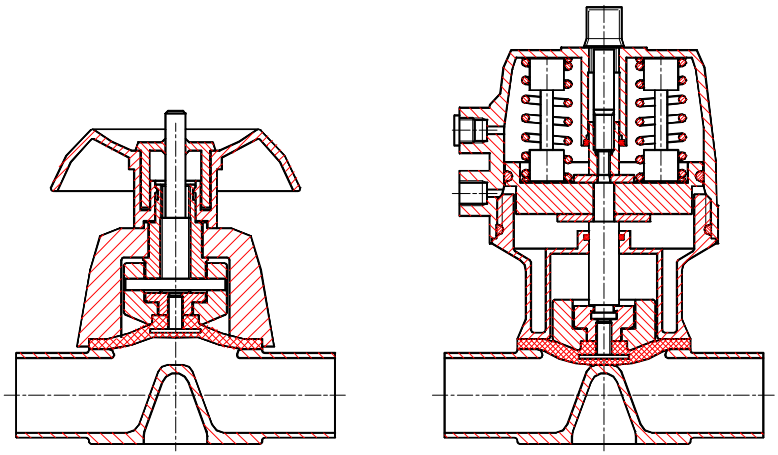

Maintenance-free
Diaphragm valves
Stainless steel

with weld ends ISO
PN 10
DN 15 - 50

Fields of application

Biotechnology, sterile process technology, food and pharmaceutical industries

Operating data

- operating temperature range from -10°C up to +120°C
- operating pressure range from vacuum up to 10 bar

Design

Soft sealing valve, weir type, either manual or pneumatic actuator operated.

Sealing in the passage and towards the outside by a diaphragm, no entrapment areas.

Actuator: SISTOMAT-P

LAP-SF	fail safe	-	spring closing
LAP-ÖF	fail safe	-	spring opening

Specification

Valve	- weld ends	DIN ISO 4200
	- face-to-face length	DIN/EN 25800 T 110
	- marking	DIN/EN 19 (ISO 5209)

Inspection

Certificate	- material	EN 10204 2.2 EN 10204 3.1 B
	- final inspection	EN 10204 3.1 B

Materials

Body	stainless steel	316L (1.4435)
Acutator	polyamid	PA Polyamid
Compressor	polyamid	PA Polyamid
Diaphragm		EPDM (FDA)
Screws	stainless steel	A2-70

Variants

Diaphragm	TFM/EPDM (FDA)

Design variants on request

Accessories	- Limit switches - Travel stop

Surface finish, body inside

Standard		Ra 3,2µm
Variants	interior polished	Ra 0,8µm
further surface qualities on request		

On all inquiries / orders please specify

1 - type	6 - medium
2 - DN	7 - surface quality
3 - working pressure	8 - diaphragm quality
4 - service pressure	9 - actuator
5 - temperature	10 - certificate

TÜV CERT DIN ISO 9001 TÜV CERT PED 97/23/EC CE

KSB

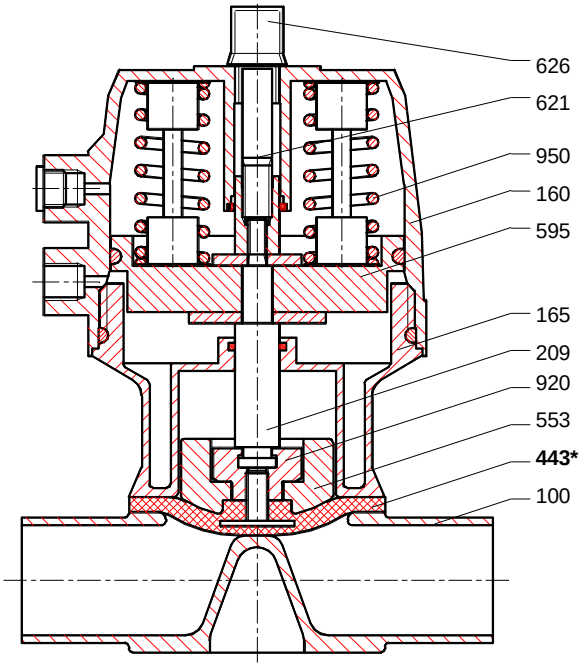

SISTOMAT-P type SISTO-LC
with pneumatic actuator LAP-SF
function: fail safe - spring closing

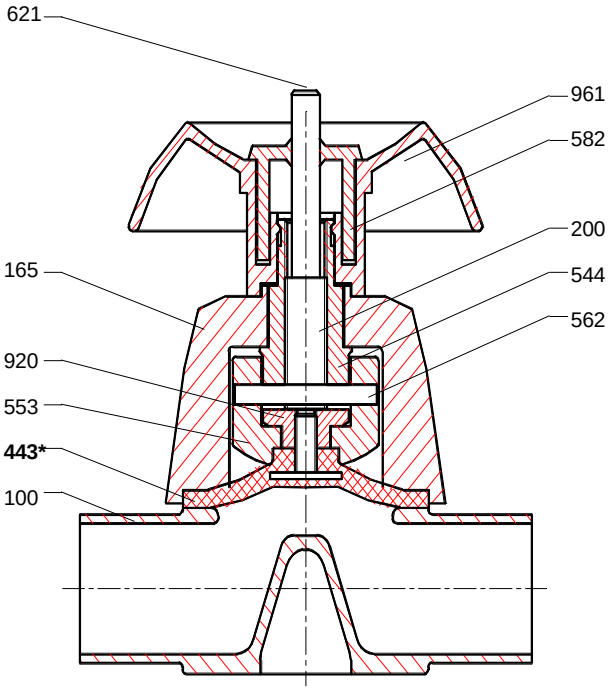

SISTO-LC
with handwheel

Item no.	Designation	Material	Note
100	body	316 L (1.4435)	stainless steel
160	screw cap	PA	
165	bonnet	PA	
200	stem	brass	
209	stem of piston	-	
443*	**diaphragm**	**EPDM**	FDA, CFR 21 Section 177.2600
		TFM/EPDM	FDA, CFR 21 Section 177.1550
544	lead bush	brass	
553	compressor	PA	
562	pin	A2	
582	cap	PA	
595	piston	-	
621	position indicator	PA	red
626	transparent cap	PA	transparent
920	nut	brass	
950	spring	-	
961	handwheel	PA	
	screw	A2-70	mounting body-bonnet
	hexagon nut	A2-70	
	disc	A2-70	
	sealing set	rubber	

***recommended replacement part**

Operating instructions 0570.821

Operating air pressure (P_{st}) for pneumatic actuator on valve with rubber diaphragm

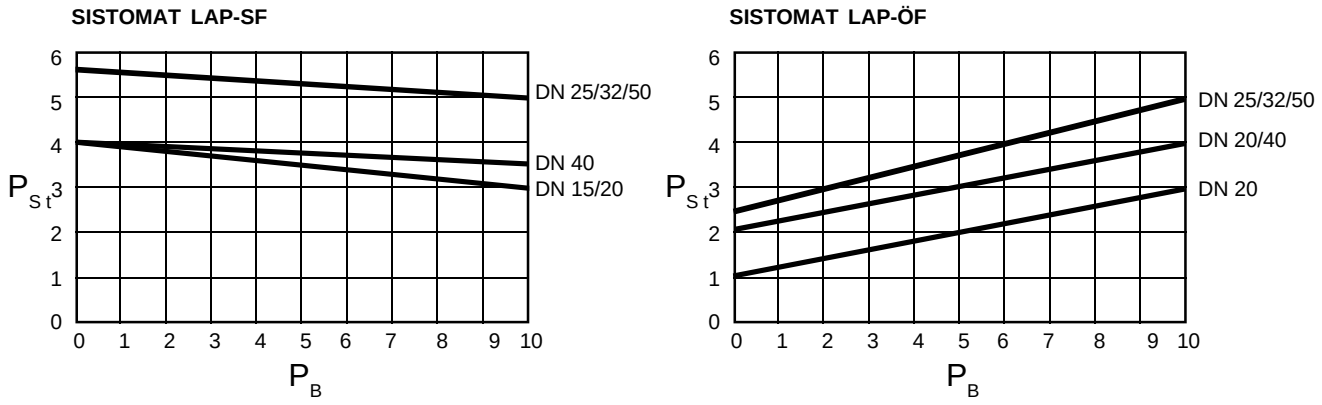

Dimensions

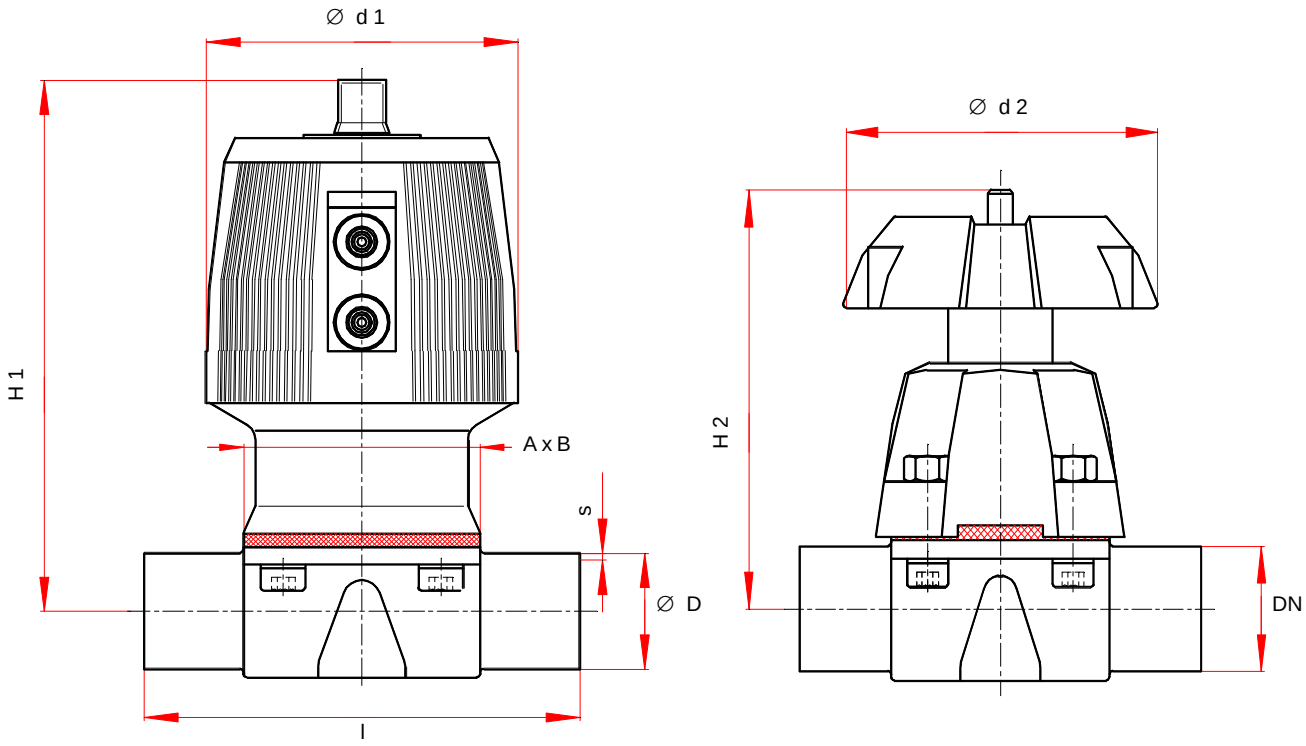

				actuated valve				manual valve		
nom. size DN	diaphragm A x B	length l	weld ends ∅ D x s	height H1	actuator ∅ d 1	volume dm³	weight kg	height H2	handwheel ∅ d 2	weight kg
015	48 x 45	108	21,3 x 1,6	110	65	0,07	0,5	90	78	0,4
020	62 x 57	117	26,9 x 1,6	140	92	0,20	1,2	100	78	0,8
025	87 x 81	127	33,7 x 2	150	92	0,22	1,4	110	93	1,0
032	100 x 91	146	42,4 x 2	190	115	0,40	2,2	125	117	1,5
040	118 x 107	159	48,3 x 2	220	142	0,77	3,8	135	117	2,5
050	145 x 132	190	60,3 x 2	240	142	1,20	4,2	165	150	3,0

position indicator indication for position „close“ and „open“

air connection
standardized to NAMUR
DN 015 - 032 Rp 1/8“
DN 040 - 050 Rp 1/4“

actuator of plastic material reduces the weight to a minimum

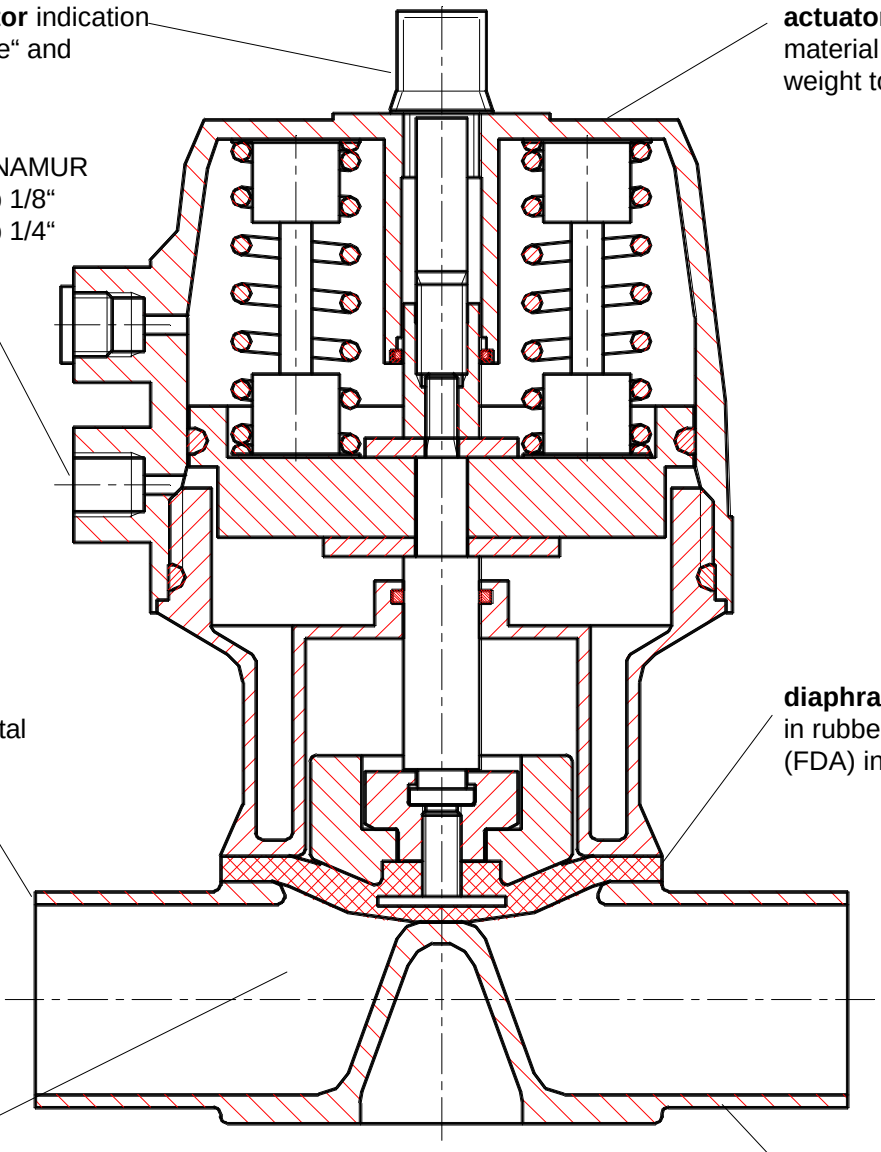

weld ends
prepared for orbital welding

diaphragm
in rubber material EPDM (FDA) increases life time

no entrapment areas
optimal flow form guaranties optimal conditions for the purity of the fluid

body
in high material quality 316L (1.4435)

This document is not contractual and may be amended without notice.

8645.1/1-10 / 01.09.2003

KSB

manufacturing company
SISTO Armaturen S.A.

Zone Industrielle
L-6468 Echternach

Tel.:+352 - 32 50 85-1
Fax:+352 - 32 89 56

MADE IN LUXEMBOURG